Development of GaN-based Power Electronics for PV Inverters

----an important BoS cost driver

Umesh K Mishra
UC Solar co-Director and Professor ECE, UC Santa Barbara
Chairman and CTO, Transphorm Inc., (a UCSB Start-up)

"Moore's Law" of Power Electronics

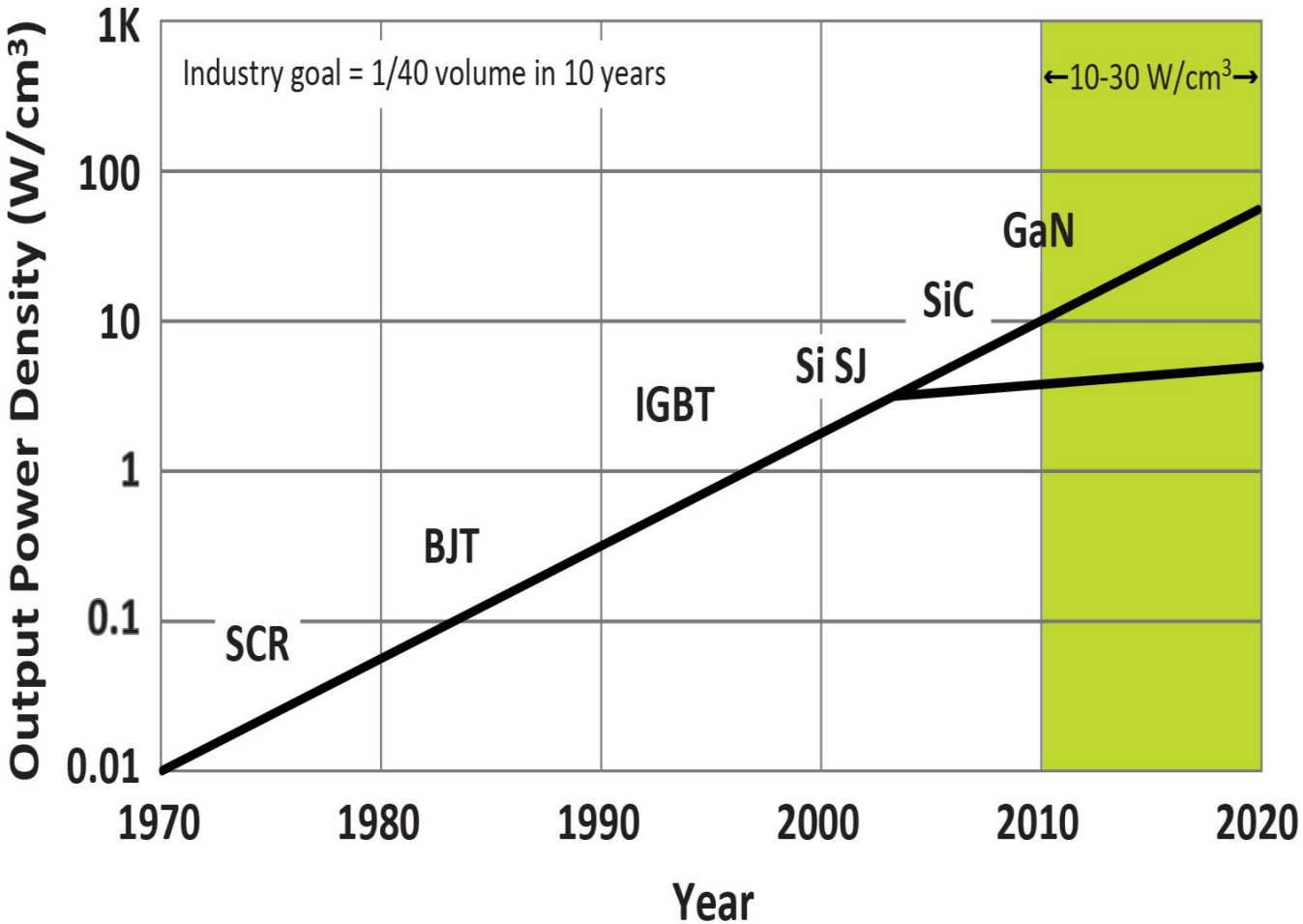

GaN is the next significant semiconductor alongside Silicon

- GaN has a direct and large bandgap
  - Enormous and growing photonics market which develops a large eco-system of infrastructure and human resources
- GaN is a lucky semiconductor; it performs reliably (in photonics and electronics)
  - Even while being an imperfect material (high dislocation density)
- In electronics it can also serve a large market
  - From KHz (power conversion) to GHz (RF amplification and communication)
- It has been proven reliable in both power conversion and RF applications
  - It is market ready
- GaN has a clear roadmap to lower cost and higher performance
  - Necessary for mass adoption
- Vertical GaN-on-GaN devices
  - Attractive for high power applications (>50kW)

Form and function is driven by frequency
Home Satellite Communication

C-Band
4-8 GHz

Ku-Band
12-18 GHz

http://www.satsig.net/pointing/dish-pointing-images.htm

Widespread distribution enabled by higher frequency

With High Efficiency at High Frequency Transphorm's EZ-GaN Disrupts PV Inverters by Providing Enhanced Efficiency and Reduced Size at Reduced Cost

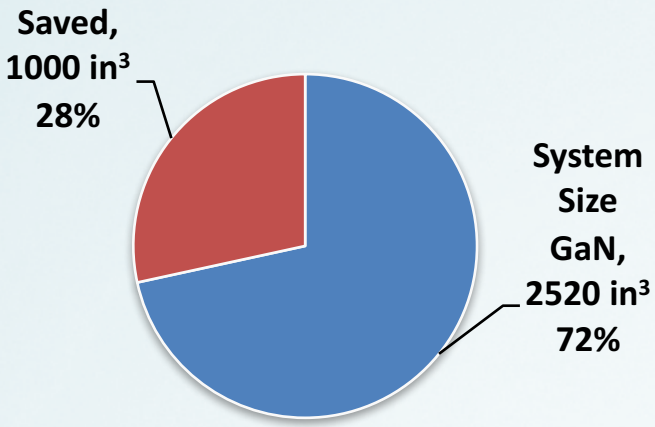

High Efficiency
– Reduces Mechanical Size

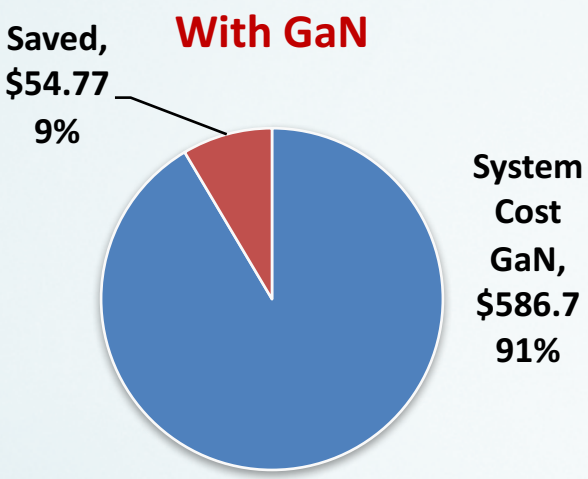

High Frequency
–Reduces Electrical Size

Analysis done for one class of inverters, will apply to other inverter classes in general

Current Inverter Technology (20 kHz)
Top Cost Drivers

Mechanical

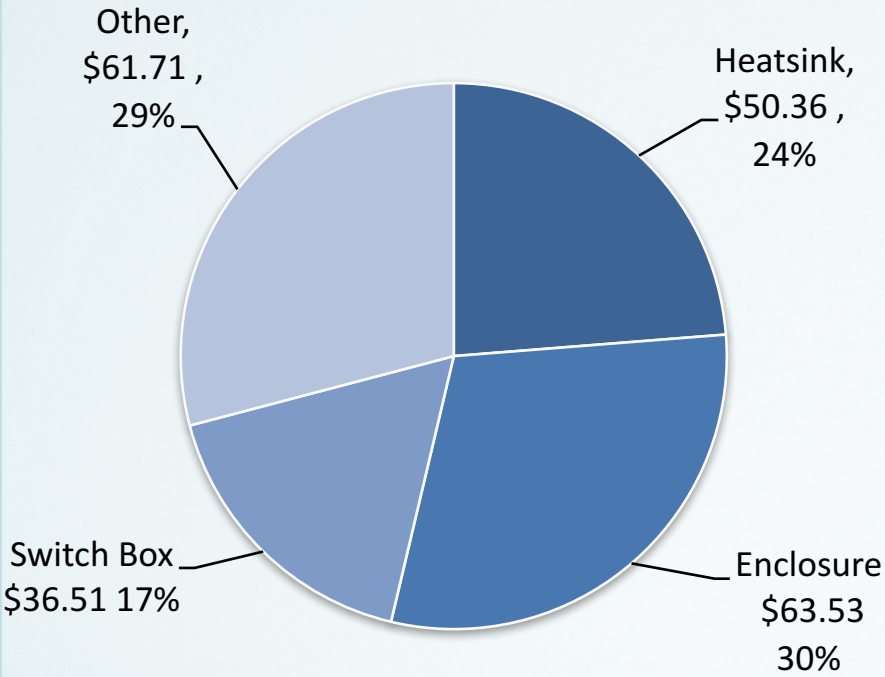

Electrical

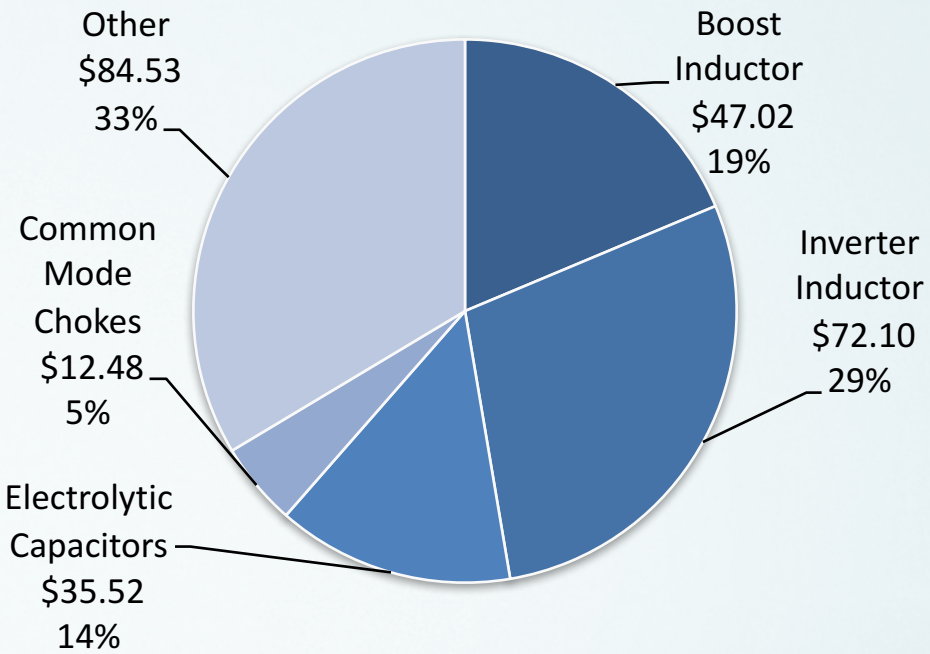

Transphorm's EZ-GaN Provides High Efficiency with Simple Topology: Reduces Size and Cost

Enables:

- Shrinking of Heatsink
- Shrinking of Enclosure

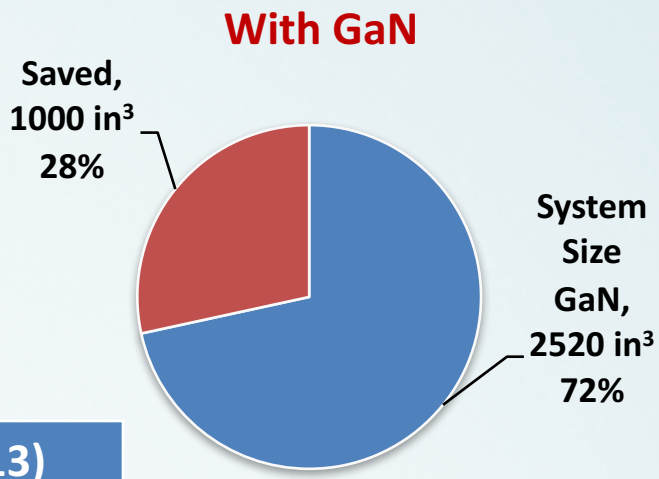

Efficiency (%)	96.8	97.5 (Current)	98.5 (2013)
Heatsink in inches			
Length	12	8.4	5.5
Width	12	7.2	3.3
Height	3	2.5	2.0

With GaN 15% system price reduction

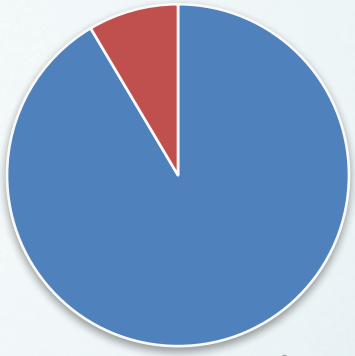

Breakdown of PV system costs for a residential system

Figure 4. NREL modeled residential rooftop PV system prices (nationwide average, 5.2 kW)

The Advantage of GaN-on-Si for Power Conversion

- GaN enables increased output power density
- Higher efficiencies at higher power and higher frequencies
  - PV inverter: 4.5kW > 98% efficiency at 50KHz (Yaskawa)
    - 10L (50% of Yaskawa's Si IGBT-based product)
  - 1U server solution: 2.2kW at 98% efficiency
    - Today's current design is 1.2kW

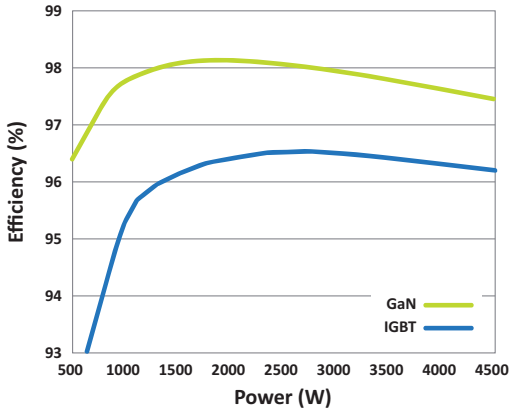

Cascode HEMT implementation

Advantage:

- Robust
- High performance
- Compatible with Si drivers

Disadvantage

- Two-chip solution

Device Cell Cross-section

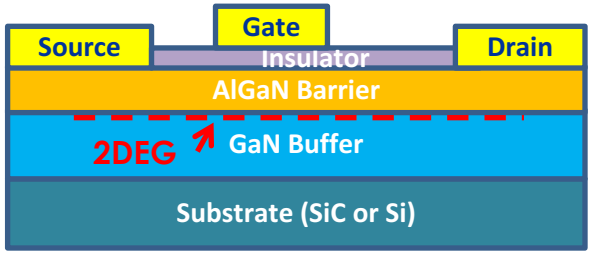

Device Layout

Cascode Approach to achieve normally off

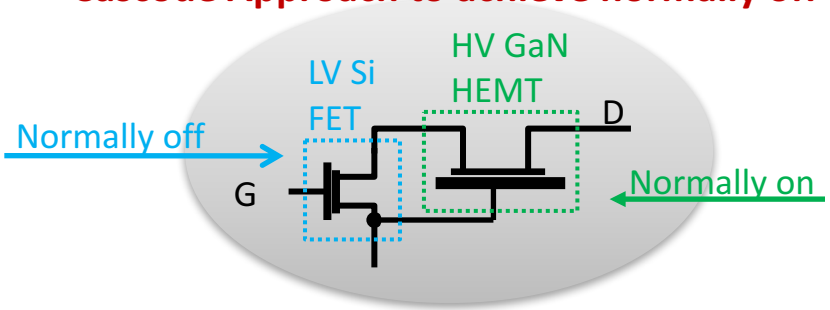

Effective CKT

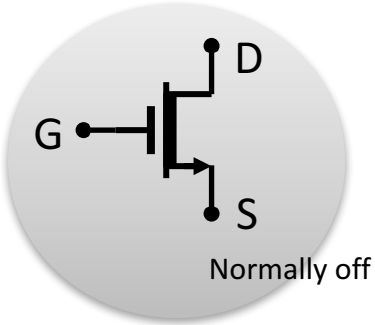

High Temperature Operating Life

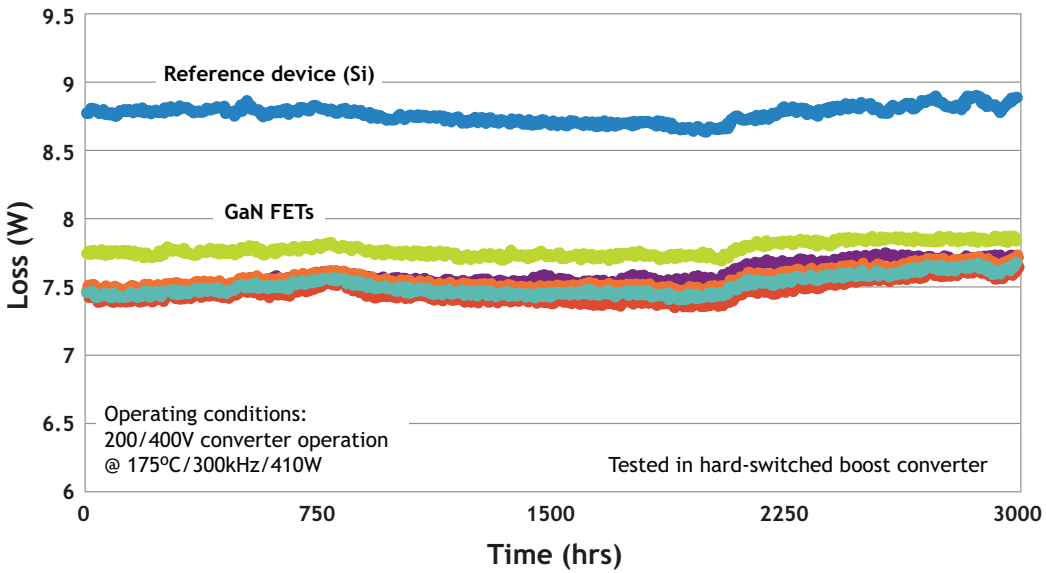

Circuit: Boost converter

- Input Voltage: 200 V
- Output Voltage: 400 V
- Operating frequency: 300kHz

- Operating Temperature: Tcase = 150°C
- Output Power: 410 W
- Test time: 3000 hours

Quality and Reliability

- Transphorm has demonstrated JEDEC-qualified 650V GaN devices
- Extended reliability testing above and beyond JEDEC
- Established intrinsic lifetime for 650V rated GaN power chips

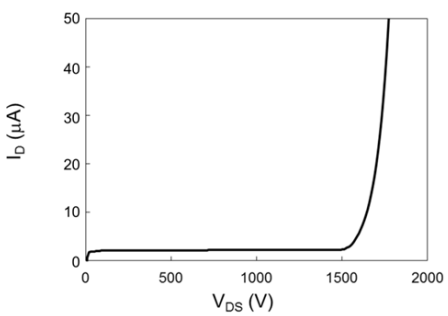

Over 1500 V breakdown voltage

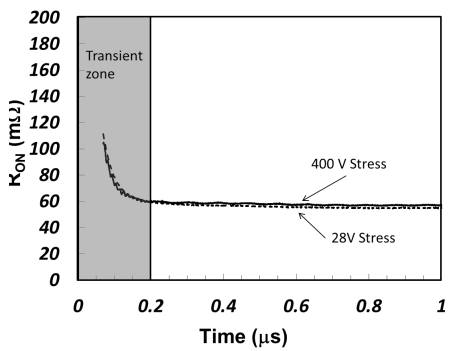

With little dynamic R(on) collapse

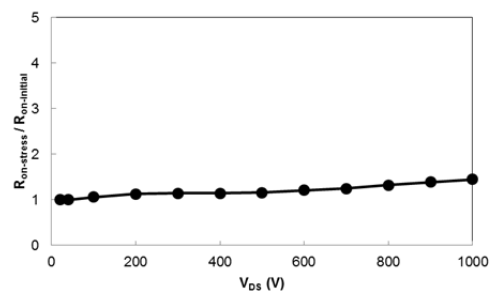

Stable switching up to 1000 Volts

Current, Temperature: High Temperature DC Testing
Voltage: High Voltage Off-State Testing

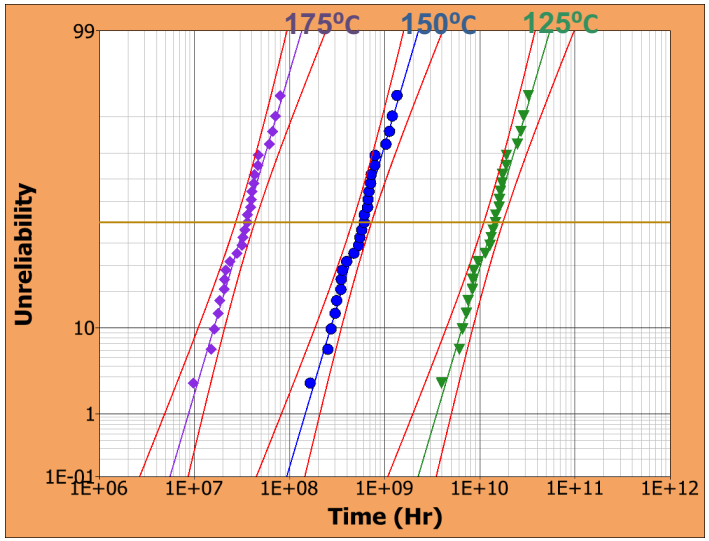

Temperature and Current Acceleration

- Devices tested at "high" range of nominal current levels
- T_j ranged from 330 to 380°C
- Results consistent with reported data
  - Ea = 1.84eV
  - Lifetime at 150°C > $1X10^8$hrs

Voltage Acceleration

- Cascode (product) devices tested
- High Voltages ranged from 1000 to 1300V
  - MTTF at 1050V = 6800hrs
  - Higher than expected voltage spikes during operation
- Nominal operating temperature = 82°C
- Lifetime at 600V > $1X10^8$hrs

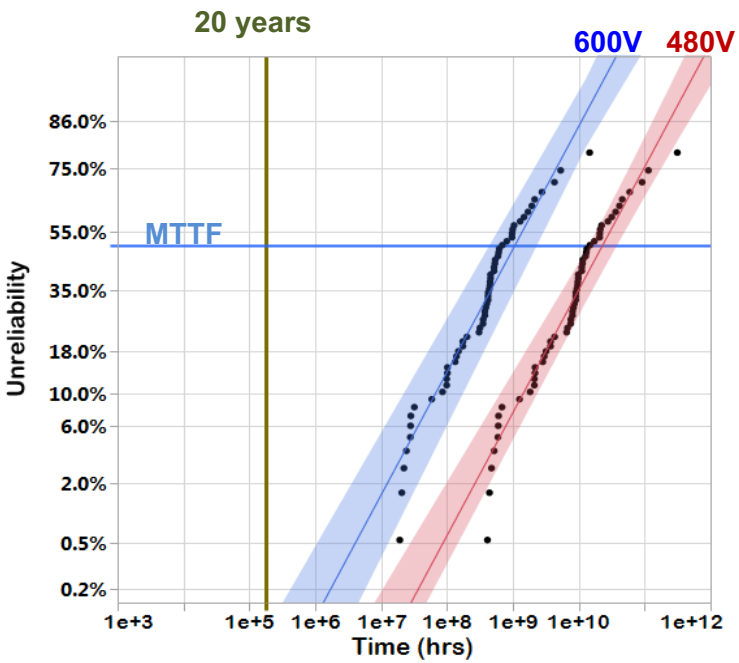

Tests provides credible and good lifetime projections

High-voltage Power Technology Transitions

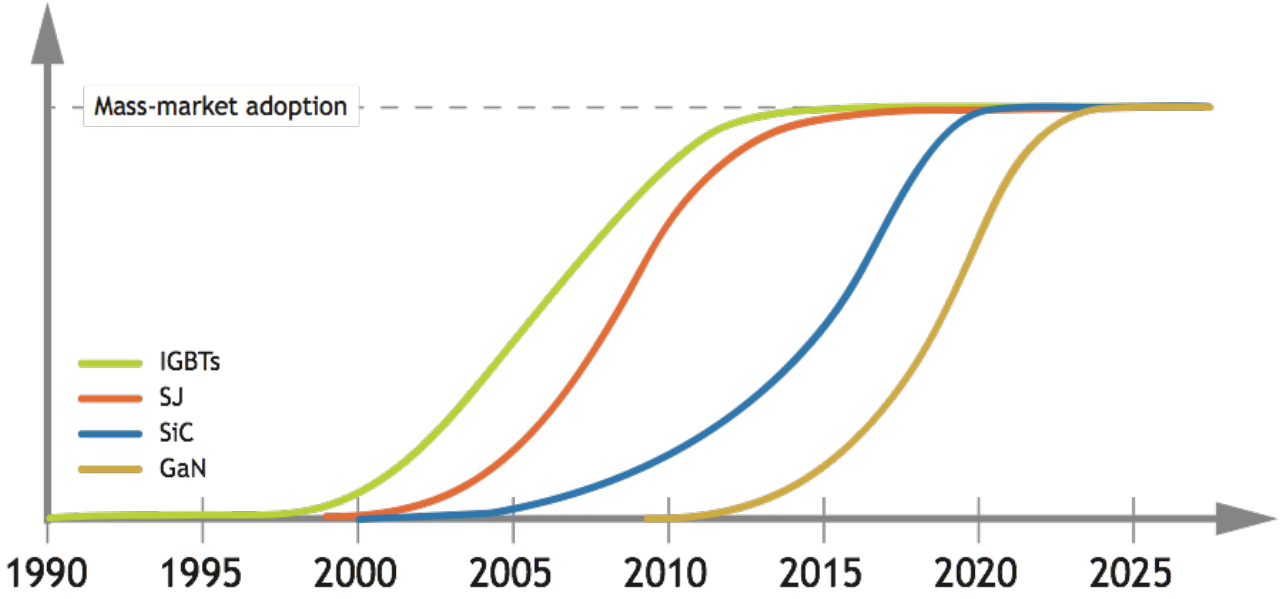

GaN-on-Si based power conversion is ready

Bottoms-up GaN Servable Market – Near Term

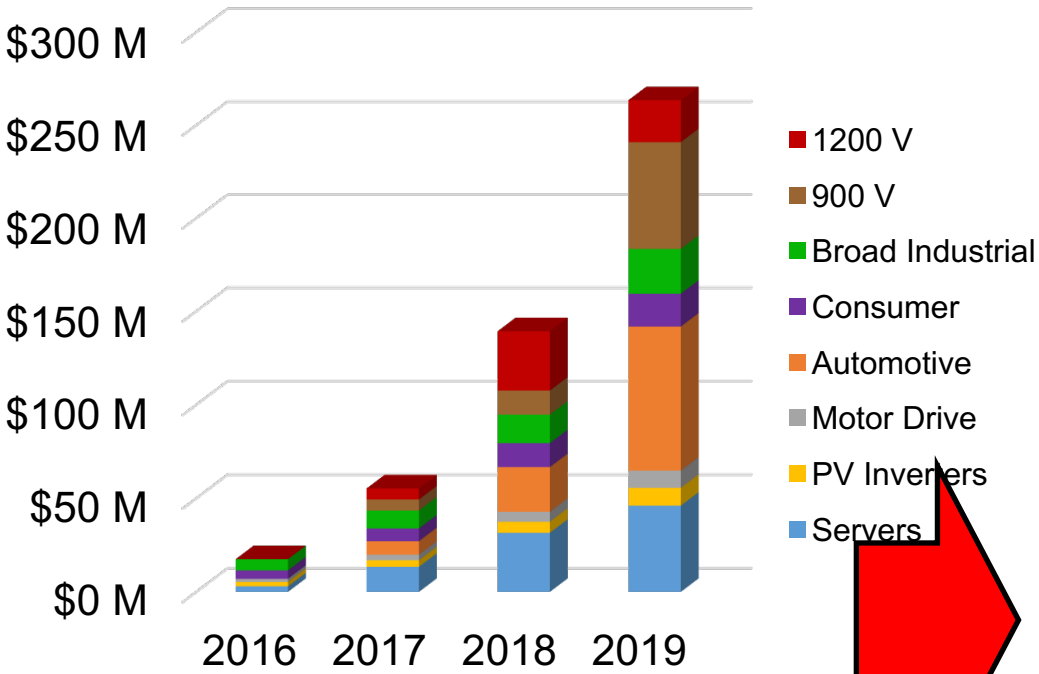

Bottoms-up GaN Servable Market – Medium Term

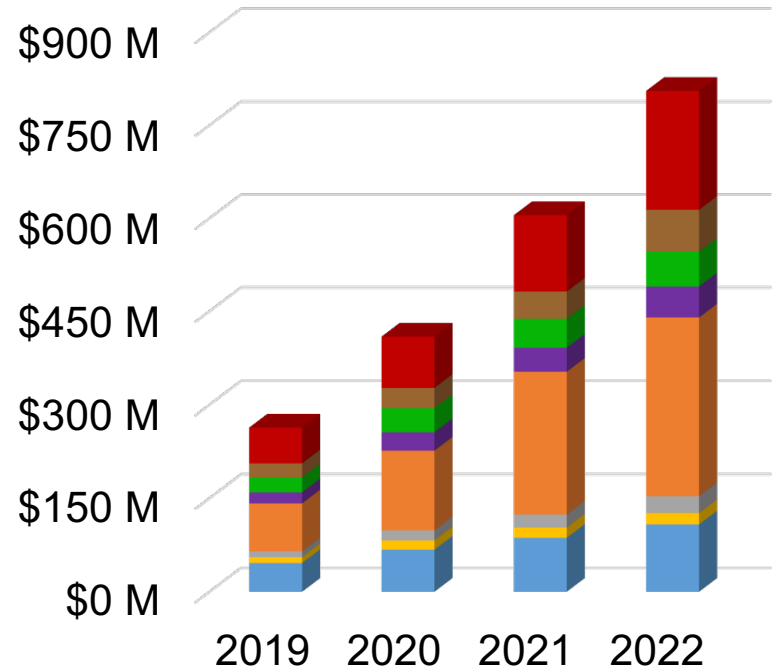

Significant inflection point in CY18/CY19 timeframe for reliable >650V GaN-on-Si product

2014/15 World Wide Vehicle Sales by Region

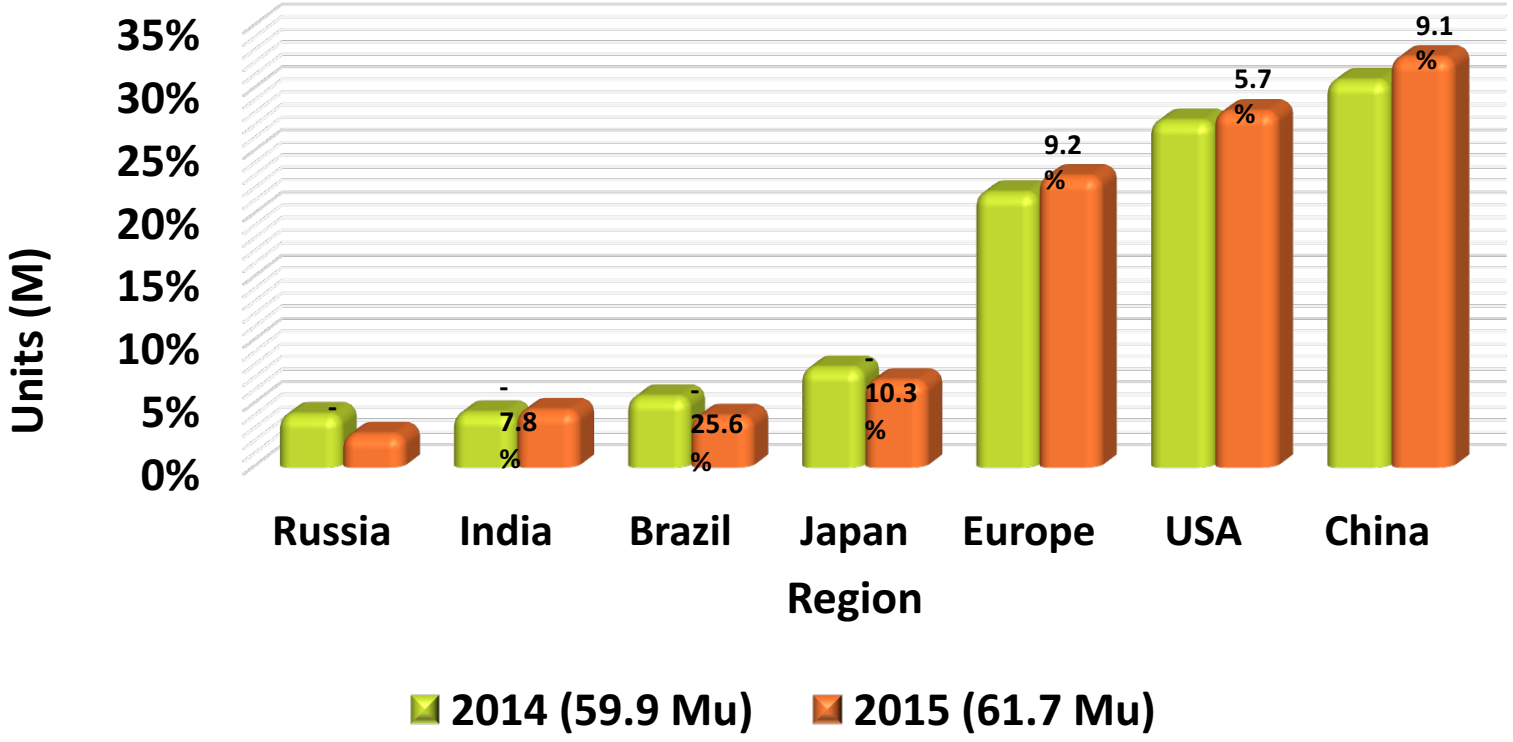

- Europe is the fastest growing: 9.2 % growth
  - Three largest markets: DE, UK, FR, (Nor, SE, NL gov't programs supporting EV's)
- China is the largest: 9.1 % growth
  - Reduced taxes on vehicles with less than 1.6 liter engines
- Japan contracted by 10.1 %

Source: VDC

transphorm

Why is GaN Targeting Auto

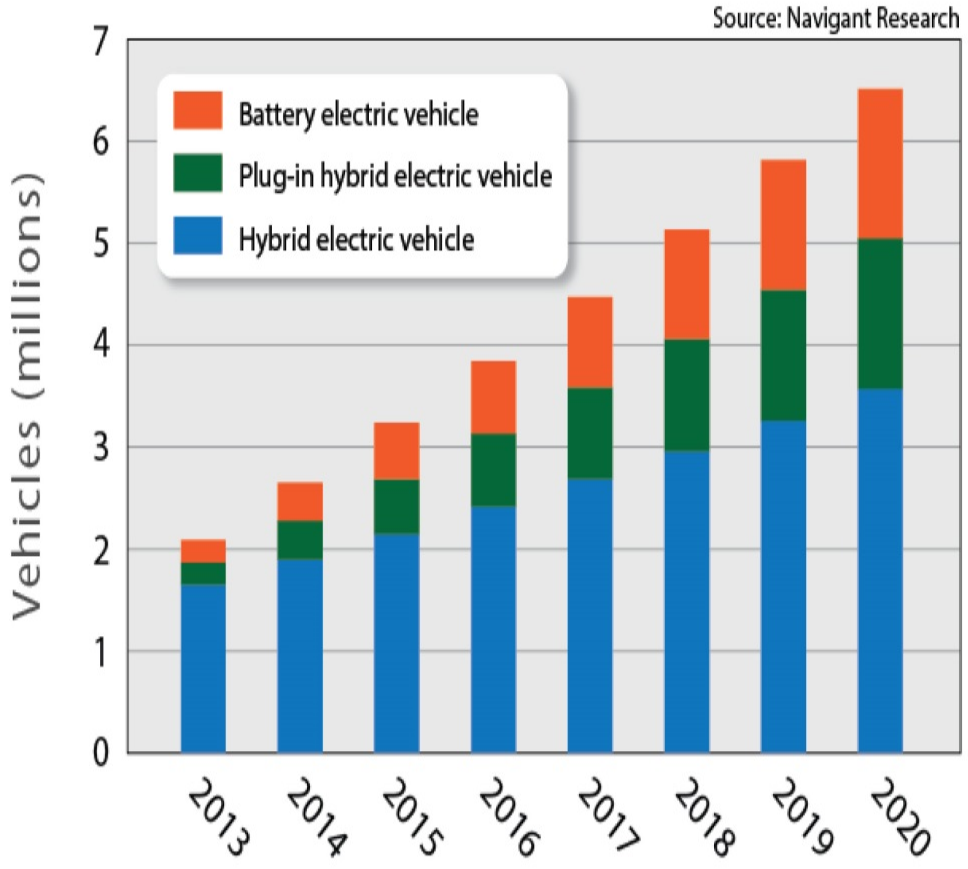

Figure 11. Electric vehicle market 2013-2020.

http://www.automotive-eetimes.com/content/lateral-gan-transistors-%E2%80%93-replacement-igbt-

transphorm

GaN's Value Proposition

Bridgeless Totem Pole PFC

Higher Frequency

Increas l Power

Transpho rm's Sales Strategy

Lower System Cost

Higher Efficiency

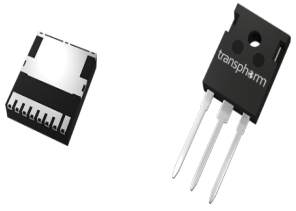

650 V / SMD & TO packages

AEC-Q101

Value of GaN is Realized in Different Topologies

Topology	Higher Performance	Higher Power Density	Lower System Cost
Standard boost PFC	X		
Interleaved boost PFC	X		
Bridgeless totem-pole PFC	X	X	X

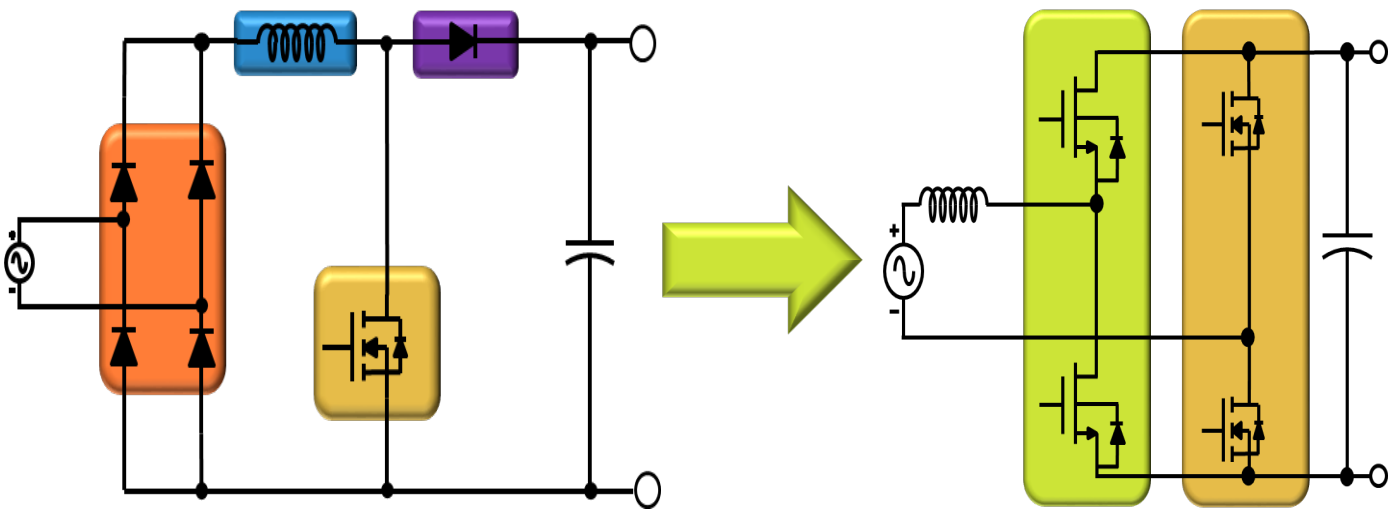

GaN Value Shown Via Customer Solution

- Project: 1.2kW power supply
- Competition: Superjunction (silicor
- Result: Higher efficiency, lower BOI
  - Reduction in part count, magnetics, EMI filter

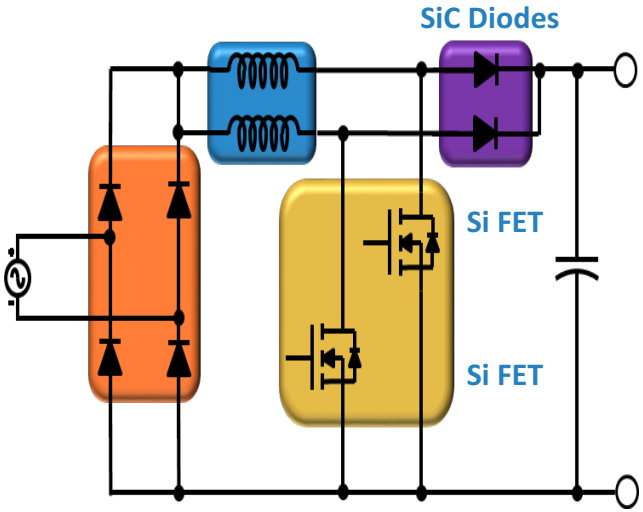

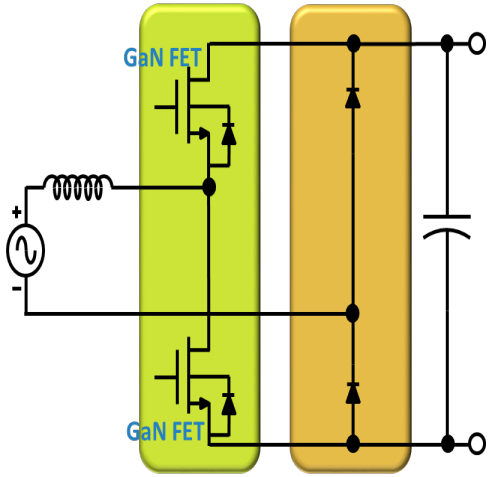

Parameter Results	Interleaved PFC	Bridgeless Totem Pole PFC
Efficiency	97.8%	98.7%
Total cost	100%	93.7%

GaN Value Shown Via Customer Solution

- Project: 3.3kW power supply
- Competition: Superjunction (silicon
- Result: Higher efficiency, lower BOM cost
  - Reduction in part count, magnetics, EMI filter

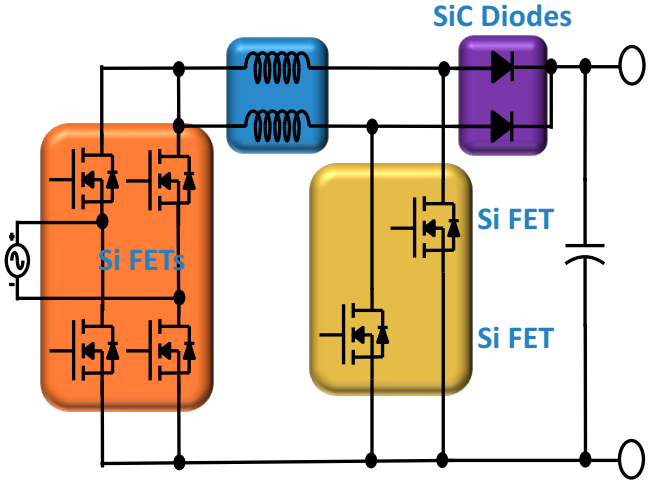

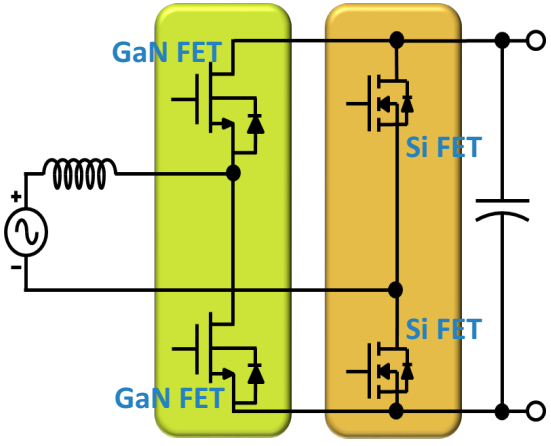

Parameter Results	Interleaved PFC	Bridgeless Totem Pole PFC
Efficiency	98.5%	98.7%
Total cost	100%	60%

Vertical design advantages over lateral design

-Grow thick GaN layers:
High BV >> 1200V

-Realize **high current** (>> 20A) devices

-**Normally-off** operation

-Reduced number of defects:
Improved Reliability, **Large E_C**

-Breakdown occurs in bulk
Avalanche capability

-GaN on GaN takes less chip area →
Lowers die cost

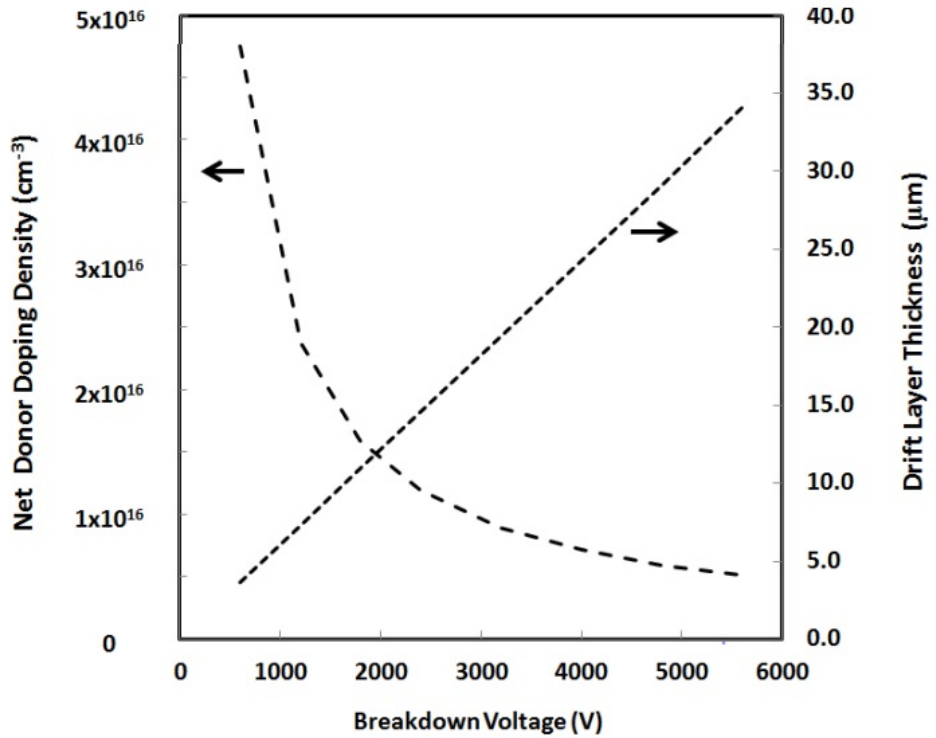

Optimum design of GaN vertical device as guided by FOM.

*KIZILYALLI et al.: VERTICAL POWER p-n DIODES BASED ON BULK GaN

State of the art vertical devices: CAVET

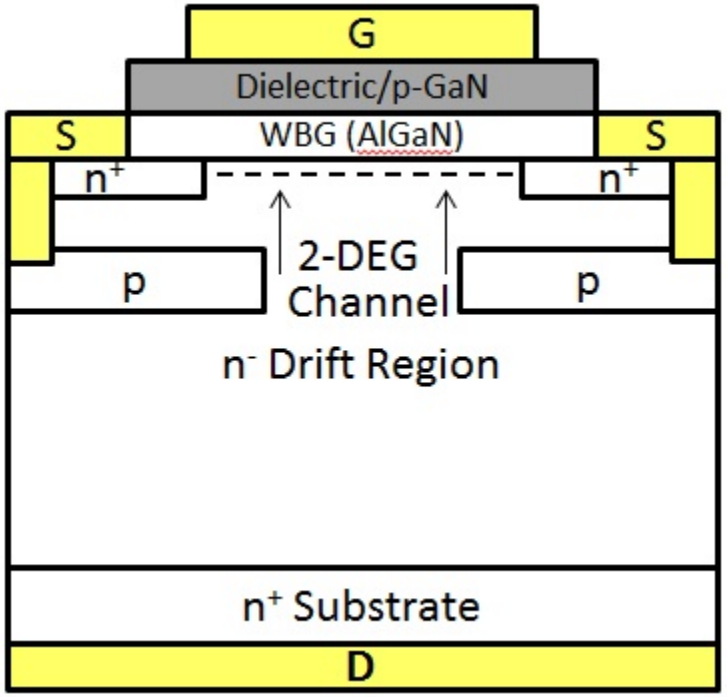

CAVET
(UCSB, ASU, Avogy, Toyota, UC Davis)

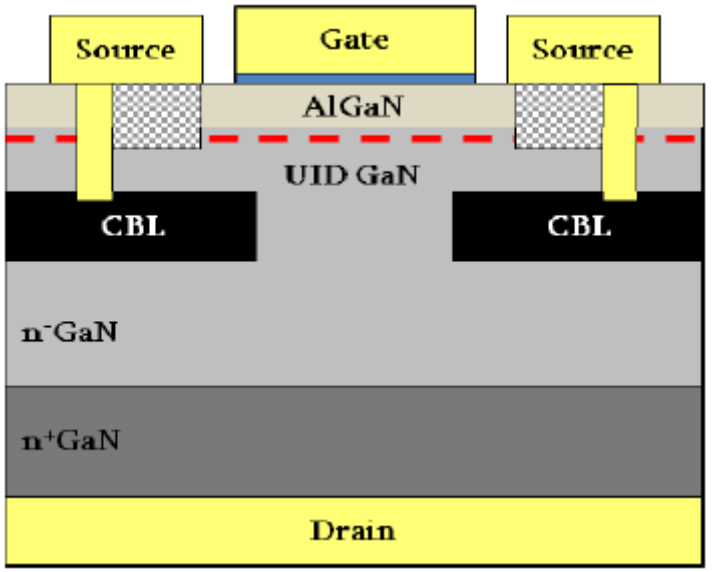

UCSB Data

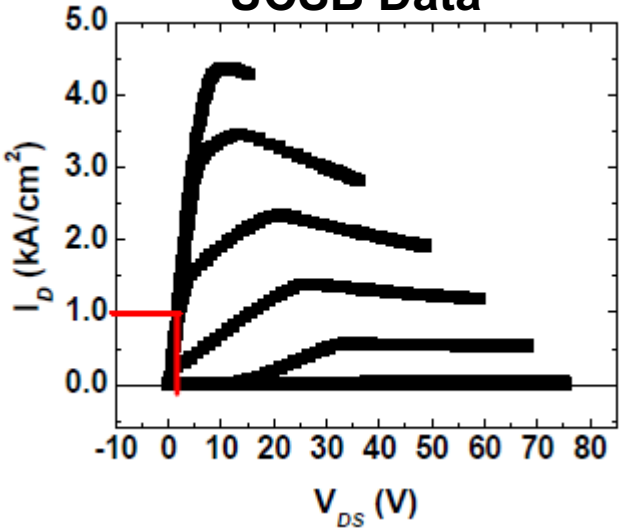

Best Performance:- 1.5 kV, 2.2 mΩ.cm² (Avogy)

Best Performance:- 380 V, 1.5 mΩ.cm² (UCSB)

Vertical GaN in a simple device topology is attractive for 1200V markets soon

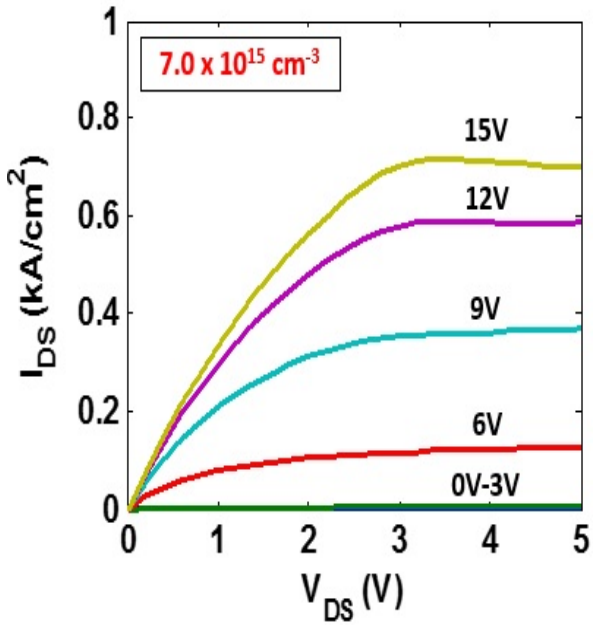

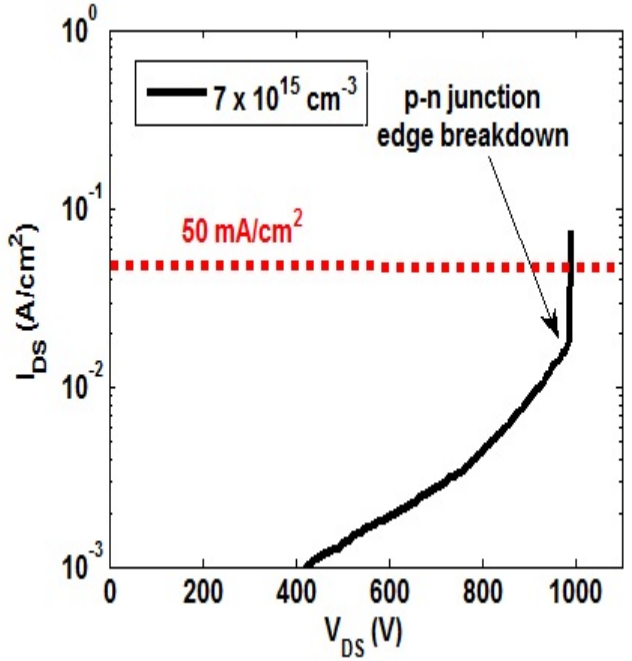

R_{ON} = 2.5 mΩ.cm^2

V_{BR} = 990 V

GaN is the next significant semiconductor alongside Silicon

- GaN has a direct and large bandgap
  - Enormous and growing photonics market which develops a large eco-system of infrastructure and human resources
- GaN is a lucky semiconductor; it performs reliably (in photonics and electronics)
  - Even while being an imperfect material (high dislocation density)
- In electronics it can also serve a large market
  - From KHz (power conversion) to GHz (RF amplification and communication)
- It has been proven reliable in both power conversion and RF applications
  - It is market ready
- GaN has a clear roadmap to lower cost and higher performance
  - Necessary for mass adoption
- Vertical GaN-on-GaN devices
  - Attractive for high power applications (>50kW)

Sustained funding from UC Solar for both the PV module and the PV Inverter will Drive higher performance lower cost systems in the coming decades

Conclusion

Yes we GaN!